INSTRUCTIONS AND PARTS LIST FOR
Models 33-493 Electric Tire Press

II. OPERATION AND CONTROL

B. HOIST

2. **CAUTION!** ***Place the hoist crank on the lift drum shaft. The table is raised to the desired height by turning the crank after removing the table pins. Check to make sure the hoist cable is tracking correctly. Run the table channels from top to bottom. The cable should be on each of the two upper pulleys and should track back and forth on the cable drum. Always place table pins under the table channels when servicing or tracking the cable. If a tracking problem exists, contact the Dake factory for instructions. Be sure all table pins are fully inserted in place before applying pressure. Always remove or release pressure on the cable before pressure is applied.***

724 Robbins Road
Grand Haven, MI 49417

Phone (616) 842-7110 (800) 937-3253
Fax (616) 842-0859 (800) 846-3253
Web: www.dakecorp.com
E-Mail: customerservice@dakecorp.com

DAKE® INSTRUCTION AND REPAIR PARTS

NO. 33-493 ELECTRIC POWERED HYDRAULIC TIRE PRESS

I. SETTING UP PRESS FOR OPERATION

This press was shipped set-up ready for operation. Have an electrician connect the starter (Item 98) to a power line. The pump can rotate in either direction.

II. OPERATION AND CONTROL

A. RAM MOVEMENT

To raise the ram, turn the release valve handle (Item 81) clockwise so that the release valve (Item 74) is closed. Then press the "raise" button (Item 97) to raise the ram. The ram will raise as long as the operator presses the "raise" button. Ram movement can be stopped at any time by releasing the "raise" button.

After the work has been contacted the press will build pressure. The press will continue to build pressure as the ram advances until the press reaches its maximum tonnage. At this point the relief valve (Item 69) will open allowing oil to return back to the reservoir.

When the ram reaches its maximum stroke of twelve (12) inches the guide angle (Item 101) will contact the stroke limit switch arm (Item 100) tripping the stroke limit switch (Item 99). This opens the electrical circuit to the motor stopping it and preventing the ram from moving any further.

To release pressure and lower the ram, turn the release valve handle (Item 81) counterclockwise to open the release valve (Item 74). This permits the oil to return to the reservoir and the ram to lower.

B. HOIST

The hoist hand crank (Item 17) is provided to raise or lower the upper platen (Item 15) to the proper height for work. To change the vertical position of the upper platen sufficient tension must first be applied to the hoisting cable (Item 32) to permit removal of the table pins (Item 13). The upper platen may then be raised or lowered to the desired position. Then all of the table pins must be inserted.

NOTE: Be sure all table pins are in place before applying any pressure. Also slacken the cable. It is advisable to lower the upper platen one or two holes rather than run the ram and lower platen to the end of its stroke.

III. MAINTENANCE

A. IF OIL LEAKS UP AROUND PISTON –

1. Oil above piston leather:

If the rated stroke of the press is exceeded repeatedly by running the piston so as to uncover the bypass hole in the side of the cylinder, the small amount of oil which drains back from the bypass line will collect above the piston leather. Eventually enough may accumulate so that when the piston is brought to the top of its stroke, oil is forced out between the piston guide and the piston.

This can be remedied by disconnecting the bypass tube line (Item 95) from the cylinder. Then raising the piston slowly to about 2½" less than its rated stroke allowing the oil above the piston cap to overflow out the bypass hole into a clean can. Replace the tube line. The oil can be put back into the reservoir by removing the fill plug on the top of the reservoir.

B. IF PRESS DOES NOT HOLD PRESSURE –

1. Loose tube connections:
Check all connections and tighten any loose tube nuts.

2. Dirt under release valve ball (Item 77):
To correct this condition, remove the release valve rod, packing nut, packing, and ball. Clean out the valve seat. Reseat the valve ball using a brass rod as a drift and tapping lightly. Reassemble the valve.

If this occurs frequently, the oil should be drained from the reservoir. Then flush the reservoir to remove dirt. Refill the reservoir using Mobil D.T.E. 26 or its equivalent hydraulic oil. The oil must be filtered carefully to remove any foreign substances. Remove 3/4" pipe plug (Item 48) and 1/8" pipe plug on the side of the reservoir. Fill with oil until oil reaches the 1/8" pipe tapped hole (7 gallons). Then replace both plugs.

NOTE: Before filling the reservoir with oil check to see if ram is all the way down. Otherwise over filling could occur.

3. Worn cup leather:
If neither of the previous conditions seems to have been the cause of the press not holding pressure, the trouble may be that the piston leather is worn out or damaged. To inspect the leather, it is best to first remove the lower platen (Item 34). Next remove cap screws which bolt the piston guide to the cylinder flange. Piston and piston guide may now be lifted out of the cylinder and inverted. The leather can now be inspected and replaced if necessary. Reassemble the press being careful not to damage the lip of the leather cup as it enters the cylinder.

C. IF PRESS DOES NOT DEVELOP RATED TONNAGE –

1. Dirt under release valve ball:
Refer to Section B2 above.

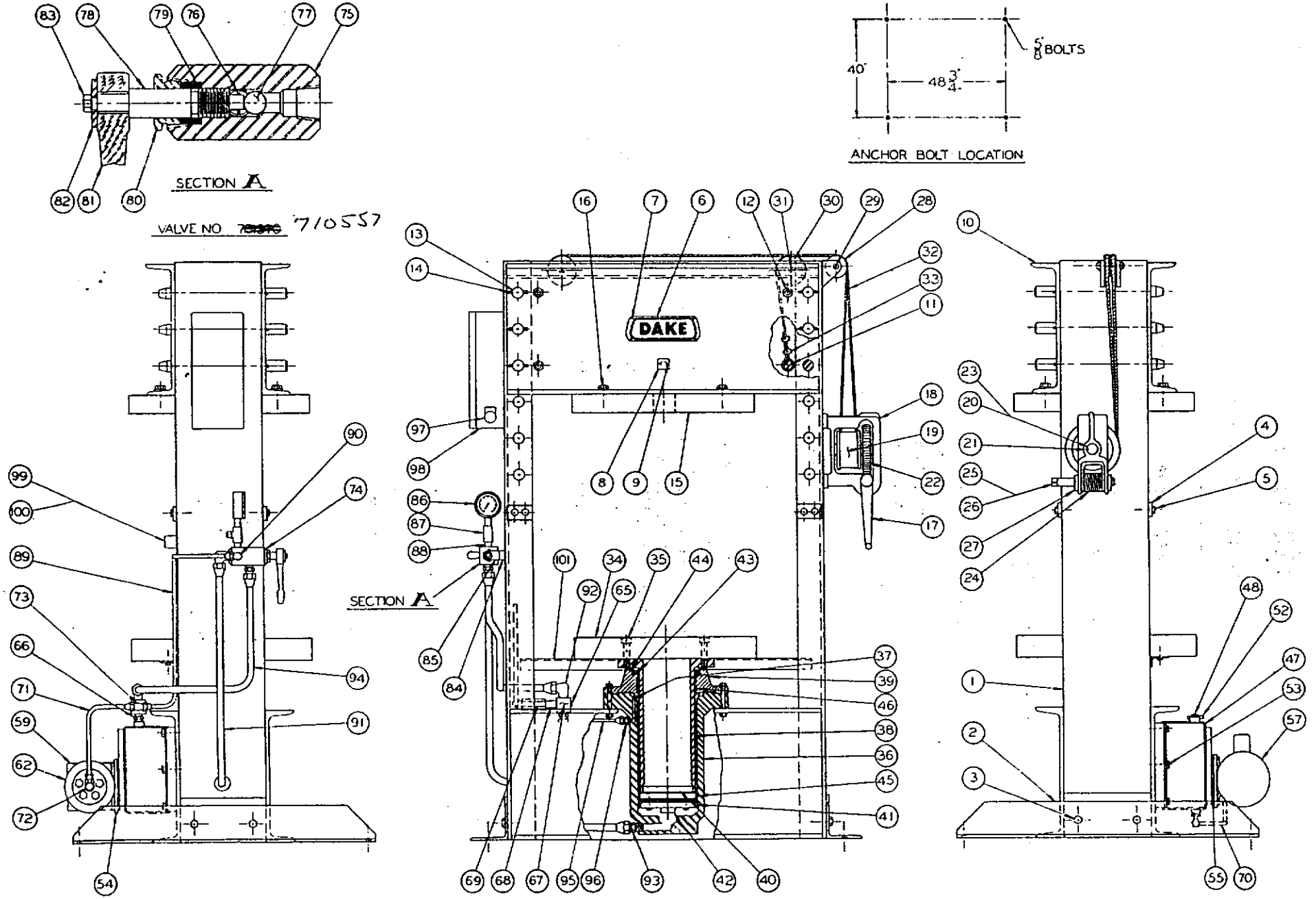
SECTION A
VALVE NO. 710557
ANCHOR BOLT LOCATION
5/8" BOLTS
40"
48 3/4"
DAKE
SECTION A

5131 - 52478 3-ea

ITEM NO.	PART NO.	PART NAME	NO. REQ'D
1	47411	Frame	1
2	1551	Base Angles	2
3	43365	5/8"-11 x 1-3/4" Hex Cap Screws	4
**	43648	5/8" Lockwashers	4
**	43917	5/8"-11 Hex Nuts	4
4	1819	Stop Blocks	4
5	43348	1/2"-13 x 1-1/4" Hex Cap Screws	8
**	43647	1/2" Lockwashers	10
6	2252	"Dake" Name Plate	1
7	43876	No. 6-32 x 1/4" Self-Tapping Screw	4
8	607	Model No. Plate	1
9	43573	No. 2 x 3/16" Drive Screws	2
10	1812	Head Channels	2
11	1553	Table Spacers	4
**	43649	3/4" Lockwashers	12
12	43919	3/4"-10 Hex Nuts	8
13	1555	Table Pins	6
14	44062	3/8" x 2-1/2" Groov-Pins	6
15	1813	Upper Platen	1
16	43373	3/4"-10 x 2" Hex Cap Screws	4
17	701653	Crank Assembly	1
18	739	Hoist Frame	1
19	740	Cable Drum	1
20	741	Drum Shaft	1
21	745	Drum Shaft Key	1
22	743	Worm Gear	1
23	43983	Nat'l. Retaining Ring No. XSO-247	1
24	744	Worm	1
25	742	Worm Shaft	1
26	746	Worm Key	1
27	43982	Nat'l. Retaining Ring No. XSO-239	2
	700111	Hoist Assembly (Items 17 thru 27)	
**	43349	1/2"-13 x 1-1/2" Hex Cap Screws	2
28	1809	Cable Pulley	2
29	1810	Cable Pulley Shaft	1
30	1563	Cable Pulley	2
31	1811	Cable Pulley Shaft	1
**	43978	Nat'l. Retaining Ring No. XSO-230	6
32	1837	Cable	1
33	583	Cable Clamps — 1/4"	4
34	1798	Lower Platen	1
35	24569	3/4" x 3-1/4" 12 Pt. Cap Screws	4
**	36863	Decal "Warning — End of Stroke"	1
36	1793	Cylinder	1
37	589	1/8" Pipe Plug	2
38	1796	Piston	1
**	1567	1/4" Pipe Plug	1
39	31871	Piston Guide	1
**	43358	1/2"-13 x 4" Hex Cap Screws	6
**	43359	1/2"-13 x 4-1/2" Hex Cap Screws	4
**	43916	1/2"-13 Hex Nuts	10
**	43647	1/2" Lockwashers	10
40	30425	Piston Cap	1
† 41	1539	Piston Leather & Heel Washer	1
42	1536	Supporting Ring	1
**	43332	3/8-16 x 1-3/4" Hex Cap Screws	8
**	43645	3/8" Lockwashers	8
† 43	1871	Oil Seal	1
44	52478	Retainer	3
**	43817	#10-24 x 1/2" Flat Head Machine Screws	3
45	31399	Wear Ring	1
46	31400	Wear Ring	2
	707070	Workhead Assembly (Items 36 thru 45)	
47	47343	Reservoir	1

ITEM NO.	PART NO.	PART NAME	NO. REQ'D
48	1745	3/4" Pipe Plug	1
**49	1567	1/4" Pipe Plug	1
**50	589	1/8" Pipe Plug	1
51	588	3/8" Pipe Plug	1
52	29571	Breather Filter	1
	46054	Oil (7 Gallons Required)	
**	43647	1/2" Lockwashers	6
53	43345	1/2" x 3/4" Hex Cap Screws	6
54	36509	Pump & Motor Base	1
55	2248	Washer — Neoprene	4
**	43645	3/8" Lockwasher	4
**56	43330	3/8" x 1-1/4" Hex Cap Screws	4
57	—	Motor	1
**58	43314	5/16"-18 x 3/4" Hex Cap Screws	4
**	43644	5/16" Lockwashers	4
**59	25916	Pump Support	1
60	43315	5/16"-18 x 1" Hex Cap Screws	4
**	43644	5/16" Lockwashers	4
**61	28498	Coupling	1
62	950106	Pump	1
**63	43469	1/2"-13 x 1" Soc. Hd. Cap Screws	4
**	43647	1/2" Lockwashers	4
**64	36761	Coupling Guard	1
**	43881	#10-24 x 3/8" Round Head Screw	4
65	1567	1/4" Pipe Plug	1
66	58227	3/4" x 3/4" FF-S Parker Pipe Nipple	1
67	37976	Connector Block	1
68	1739	3/4" x 2-1/2" Pipe Nipple — Extra Strong	1
69	29650	Relief Valve — (Set at 6000 psi)	1
70	712016	Intake Line (Reservoir — Dake Pump)	1
**	1657	Hex Reducer 3/4"-3/8" — (In Reservoir) Steel	1
**	17999	1/2" Tube Elbow (In Pump)	1
71	712017	Tube Assembly (Dake Pump — Relief Valve)	1
72	1252	1/2" Tube Elbow	2
73	18249	1/2" Tube Tee	1
74	710557	Release Valve "Section A"	
75	1752	Release Valve Block	1
76	1935	Ball Retainer	1
† 77	1936	Ball Valve — 3/4" Dia.	1
78	47946	Valve Rod	1
† 79	1937	Valve Rod Packing (7 Req'd.)	1 set
80	1931	Packing Nut	1
81	2230	Handle	1
82	898	Washer	1
83	6203	Valve Handle Bolt	1
**	596	1/2" Pipe Plug	1
84	47948	Release Valve Spacer	1
**	43334	3/8"-16 x 2-1/4" Hex Cap Screws	2
**	43645	3/8" Lockwashers	2
85	47947	Stop-Release Valve Rod	1
86	2025	Gauge — 150 Ton	1
87	45387	Pulsation Dampener	1
88	44179	1/2" x 1-1/2" Pipe Nipple — Extra Strong	1
89	712018	Tube Assembly (Relief Valve-Release Valve)	1
90	17999	1/2" Tube Elbow	1
91	707474	Tube Assembly (Release Valve to Cylinder)	1
92	1944	7/8" Tube Elbow	1
93	1943	7/8" Straight Fittings	3
94	712019	Tube Assembly (Release Valve to Reservoir)	1
95	712020	Tube Assembly — By-Pass (Cylinder-Reservoir)	1
96	1247	3/8" Straight Fittings	2
**	1102	Hex Reducer 3/8"-1/4" (Steel)	1
**	44156	1/4" x 1-1/2" Pipe Nipple — Extra Strong	1
**	1099	1/4" Pipe Elbow 300#	1

ALL PARTS PRICES INCREASED 10%
EFFECTIVE JANUARY 1, 1987

*Price on Application C.A. Commercially Available

All prices are subject to change without notice. Prices do not include postage or express charges.

ITEM NO.	PART NO.	PART NAME	NO. REQ'D
**	29699	Pushbutton Contact Block	1
**	29774	Pushbutton Name Plate "Raise"	1
97	29782	Pushbutton Black Mushroom	1
**	43643	1/4" Lockwasher	3
**	43301	1/4"-20 x 1/2" Hex Cap Screws	3
		— IF 230 VOLT —	
98	38408	A.B. Starter No. 709AAA-43	1
**	29724	N-26 Heater	3
		— IF 460 VOLT —	
98	38409	A.B. Starter No. 709AAB-43	1
**	29722	N-19 Heater	3
99	35941	Micro Limit Switch No. LSA1A	1
100	46743	Micro Limit Switch Arm No. LSZ52CC	1
101	61063	Guide Angle (One Right Hand and One Left Hand)	2
**	43645	3/8" Lockwasher	4
**	43326	3/8"-16 x 3/4" Hex Cap Screw	4
	706540	Repair Kit (Items 41, 43, 77 & 79)	

*Price on Application
**Not Illustrated
C.A. Commercially Available
†Items in Repair Kit

ALL PARTS PRICES INCREASED 10%
EFFECTIVE JANUARY 1, 1987

2. Worn cup leather:
Refer to Section B3 above.

3. Relief valve set low:
The relief valve (Item 69) has been set at the factory to bypass oil back to the reservoir when the press reaches its rated capacity. If, however, the press does not develop its rated tonnage and the above two conditions have been checked, the relief valve may need readjusting. To do this first remove the 1/4" pipe plug (Item 65) in the connector block. Now the valve adjustment screw can be reached with a 7/32" allen wrench. To increase the setting, turn the adjustment screw clockwise. Be careful not to adjust the valve over its rated tonnage or maximum operating pressure of 6000 psi.

NOTE: Do not exceed the maximum operating pressure of 6000 psi.

D. NO RAM MOVEMENT — (motor runs when "raise" button is pressed)

1. Release valve open:
Be sure to have release valve firmly closed when using press.

2. Insufficient oil:
Check oil level in the reservoir with the ram down. Remove the 1/8" pipe plug on the side of the reservoir. The oil level should be up to this hole.

3. Pump loses its prime:
Make sure all pump intake connections are tight — not enough oil in the reservoir.