EliteMetalTools.com
281-241-9504
insidesales@elitemetaltools.com
M-F 8:00 AM - 7:30 PM EST

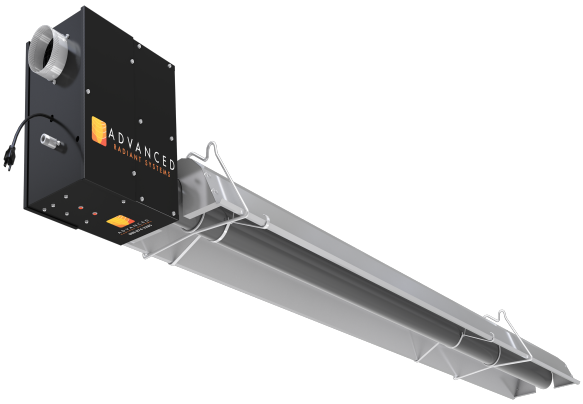

*Images may display items not included with purchase

Advanced Radiant Systems ES 120V 60ft 150,000 BTU Single Stage Unitary Infrared Heater S60-150MBH

~~$4,509~~
$3,607 Save $902!

As low as $117/mo through Elite Metal Tools financing partners.

FREE SHIPPING

Use your phone to take a picture of this QR Code to learn more!

Specifications

Manufacturer	Advanced Radiant Systems
EMT ID	16638
SKU	S60-150MBH
Shipping Method	LTL Freight
Weight	326 lb
Dimensions	126 × 24 × 30 in
Country of Origin	United States of America
Warranty	3 Years (Parts)
	3 years for Burner and Controls, 5 years for Hot Rolled Heat Exchanger w/o Post Purge, 7 years for

ADVANCED RADIANT SYSTEMS

- Fire Rate (BTU/HR): 150,000
- Heat Exchanger Length: 60 ft
- Electric Supply: 120 V AC, 60 HZ, 1 Amp: 36” cord, grounded 3 prong plug
- Flue and Outside Air Connection: 4” O.D. connection for flue adapter provided at the heater

Free Shipping
Free shipping on ALL machines throughout the contiguous United States to all commercial locations.

Customer Service
Fast and friendly service centered around creating a positive experience.

Product Selection
A wide selection of machinery for you to compare brands and features. Find the right machine for your job.

Knowledgeable Staff
When you have questions, we have the staff that will help you find the answer and equipment that best fits your needs.

Price Matching
Our prices are highly competitive. However, if you find an item cheaper somehwere else, we will match that price. Contact us for details.